WEIGHT (LBS)	INDUCTANCE	LOSS (WATTS)
37	0.30 mH	84

ECO No	DESCRIPTION	REV BY	DATE
M9655	FLIPPED COILS; DIMENSIONS CHANGES 2.59 WAS 3.17; 5.30 WAS 5.88	RAH	08/17/15

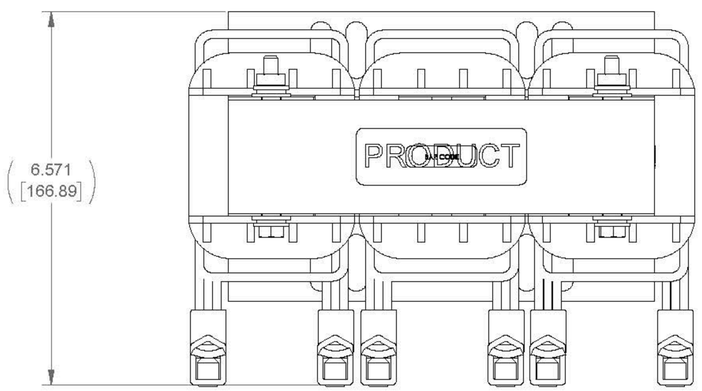

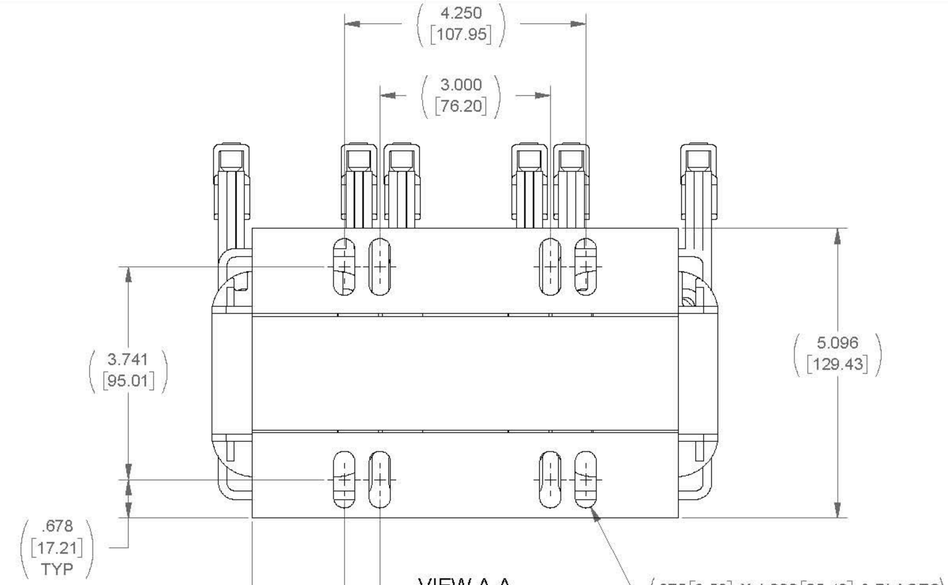

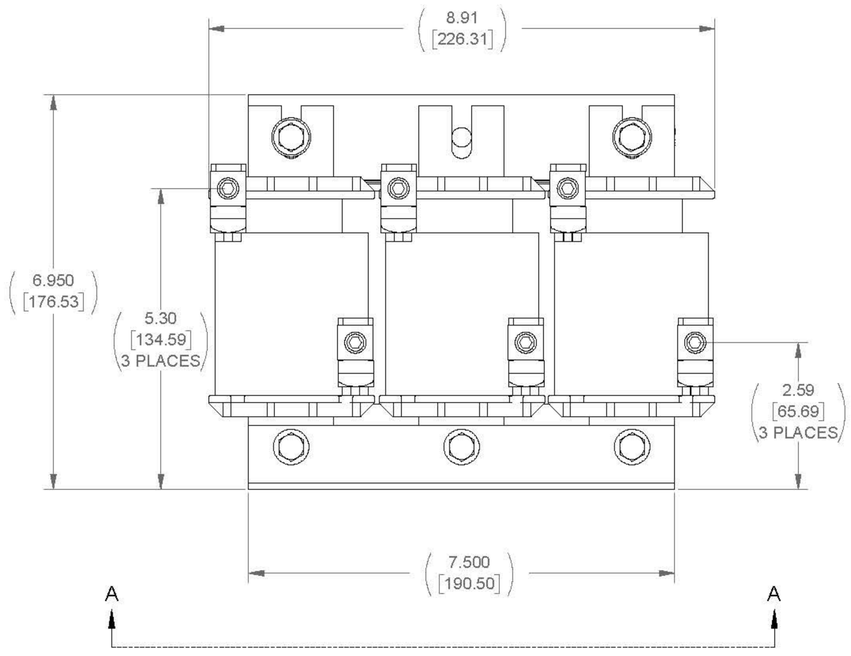

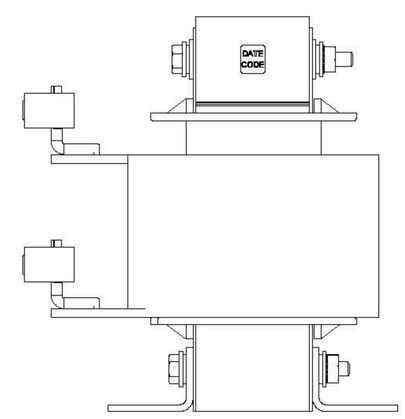

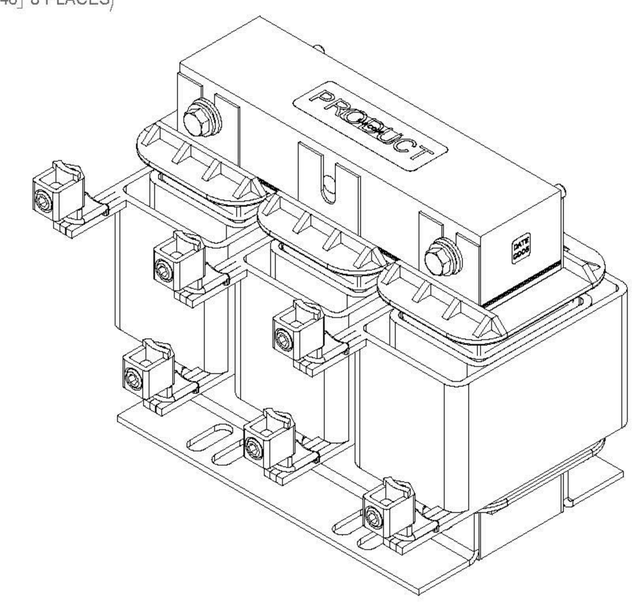

NOTES:
1. TERMINAL SCREW TORQUE: 6-4 (45 IN-LBS MAX), 2-0 (50 IN-LBS MAX)
2. WIRE RANGE: 6-0 AWG

THE COMPONENT, PART OR ASSEMBLY DESCRIBED IN THIS DOCUMENT MUST COMPLY WITH THE EU(EUROPEAN UNION) DIRECTIVE RoHS2

CONTAINS <0.1% OF ANY SVHC BY WEIGHT PER REACH REGULATION

UNLESS OTHERWISE SPECIFIED DIMENSIONS ARE IN INCHES [MM]
TOLERANCES ARE:

ANGLES: ± 1 °

1 PLACE .X: ± .1 [2.5]

2 PLACE .XX: ± .01 [0.25]

3 PLACE .XXX: ± .005 [0.127]

MTE
AN SL INDUSTRIES COMPANY

N83 W13330 Leon Road
Menomonee Falls, WI 53051 USA
800.455.4683
262.253.8200

MATERIAL

DRAWN	MDG	DATE 9/30/05
CHECKED	JM	DATE 08/17/15
APPROVED	JM	DATE 08/17/15

CONFIDENTIAL AND PROPRIETARY INFORMATION
THIS DOCUMENT CONTAINS CONFIDENTIAL AND PROPRIETARY INFORMATION OF MTE CORPORATION AND MAY NOT BE USED, COPIED OR DISCLOSED TO OTHERS EXCEPT WITH THE AUTHORIZED WRITTEN PERMISSION OF MTE CORPORATION

DESCRIPTION

LINE/LOAD REACTOR

SIZE	DWG No.	REV
D	CD RL-10002	16

SCALE 1:2 SHEET 1 OF 1