WEIGHT (LBS)	INDUCTANCE	LOSS (WATTS)
4	1.6mH	48.2

ECO No	DESCRIPTION	REV BY	DATE
M8321	DIMENSION CHANGE	JP	12/14/12

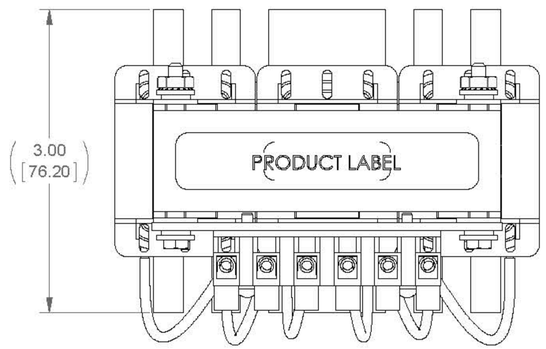

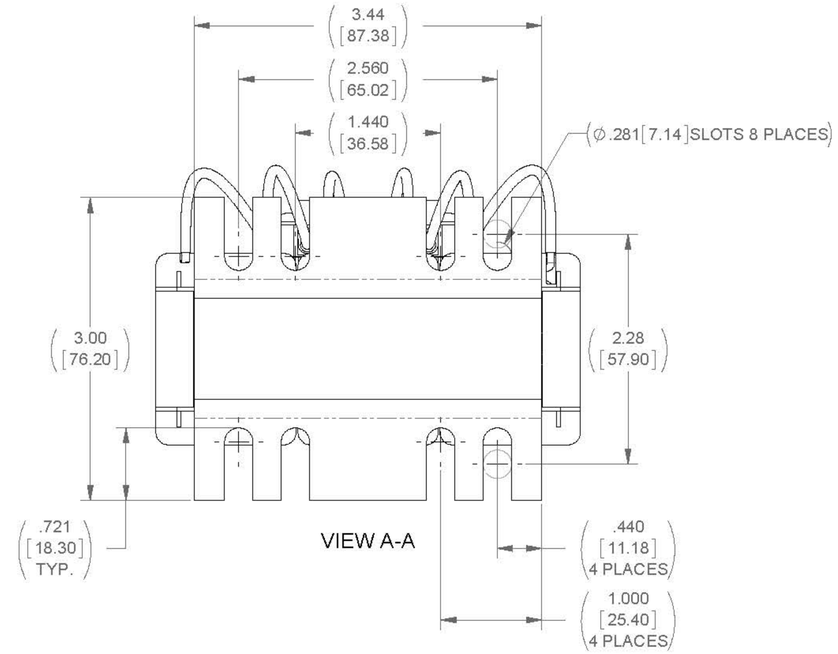

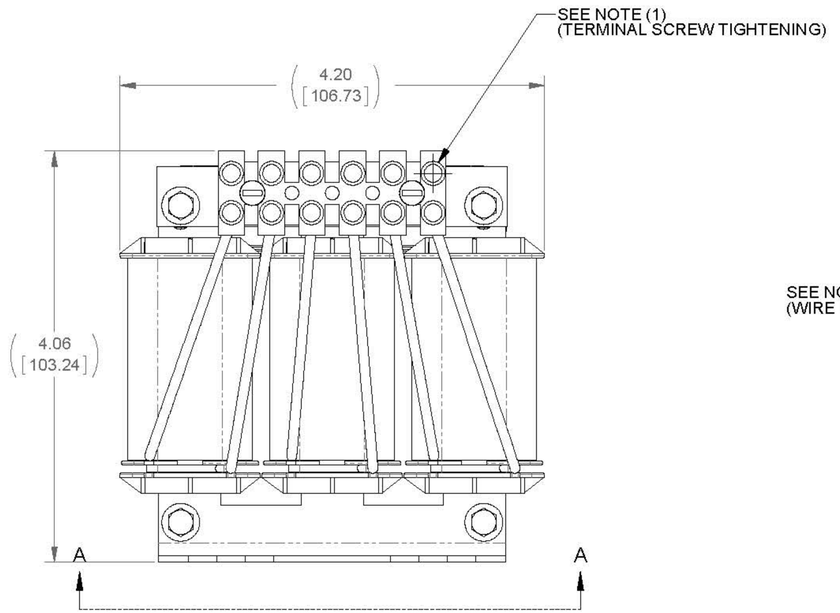

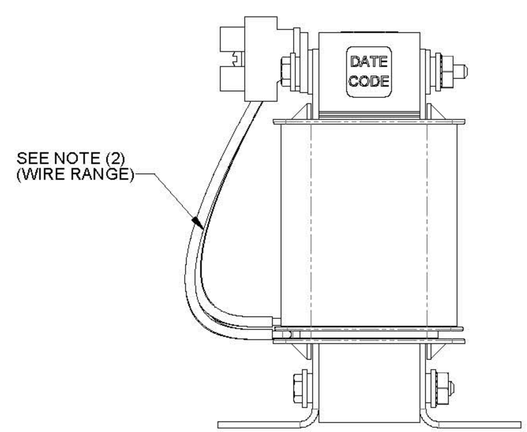

NOTES:

1. TERMINAL SCREW TIGHTENING TORQUE: 4.5 in-lbs MAX
2. WIRE RANGE: 22 - 10 AWG

THE COMPONENT, PART OR ASSEMBLY DESCRIBED IN THIS DOCUMENT MUST COMPLY WITH THE EU(EUROPEAN UNION) DIRECTIVE RoHS

CONTAINS <0.1% OF ANY SVHC BY WEIGHT PER REACH REGULATION

UNLESS OTHERWISE SPECIFIED DIMENSIONS ARE IN INCHES [MM]
TOLERANCES ARE:

ANGLES: ± 1 °

1 PLACE .X: ± .1 [2.5]

2 PLACE .XX: ± .03 [0.76]

3 PLACE .XXX: ± .010 [0.254]

MTE
AN BL POWER ELECTRONICS COMPANY

N83 W13330 Leon Road
Menomonee Falls, WI 53051 USA
800.455.4683
262.253.8200

MATERIAL

DRAWN	JP	DATE 08/31/12
CHECKED	TM	DATE 12/21/12
APPROVED	TM	DATE 12/21/12

CONFIDENTIAL AND PROPRIETARY INFORMATION
THIS DOCUMENT CONTAINS CONFIDENTIAL AND PROPRIETARY INFORMATION OF MTE CORPORATION AND MAY NOT BE USED, COPIED OR DISCLOSED TO OTHERS EXCEPT WITH THE AUTHORIZED WRITTEN PERMISSION OF MTE CORPORATION

DESCRIPTION

LINE REACTOR

SIZE	DWG No.	REV
D	CD RLW-001403	06

SCALE 4:3

SHEET 1 OF 1